A.D. 1858, 30th *August*. N° 1963.

SPECIFICATION

OF

JOHN OXLEY.

BATHS.

LONDON:
PRINTED BY GEORGE E. EYRE AND WILLIAM SPOTTISWOODE,
PRINTERS TO THE QUEEN'S MOST EXCELLENT MAJESTY:
PUBLISHED AT THE GREAT SEAL PATENT OFFICE,
25, SOUTHAMPTON BUILDINGS, HOLBORN.
1859.

Price 7d.

A.D. 1858, *30th August.* N° 1963.

Baths.

LETTERS PATENT to John Oxley, of Camden Town, for the Invention of "Improvements in Baths."

Sealed the 25th February 1859, and dated the 30th August 1858.

PROVISIONAL SPECIFICATION left by the said John Oxley at the Office of the Commissioners of Patents, with his Petition, on the 30th August 1858.

I, John Oxley, of Camden Town, do hereby declare the nature of the said Invention for "Improvements in Baths," to be as follows:—

This Invention relates to a novel combination of the parts of baths, by which a bath of the size and form of an ordinary hip bath is made to serve the purposes for which various other baths and such like domestic conveniences are ordinarilly employed or would be rendered necessary, thus economizing the room necessary for accommodating several articles, and giving increased comfort and convenience to the users of baths.

The difficulties attendant upon preparing an ordinary reclining bath, the large quantity of water required for it, and the room it occupies, prevent the constant exercise by very many of the most important of all health-maintaining practices, whereas, by the introduction of the present Invention these objections and difficulties are avoided, and the facility for thoroughly cleansing the entire body, requiring only a small quantity of water, enabling the bather to perform his ablutions with ease whilst in a sitting posture, and without the risk of slopping or permitting the water to splash over, and which

arrangement may also be combined with, when required, the ordinary fittings of a shower bath.

This Invention, as herein-before in part described, consists in constructing a bath somewhat in the form of the ordinary hip bath, and fitting the same with a moveable seat containing a recess for receiving a moveable tray, pool, or bidet; or the pool or bidet may be formed in such moveable seat, and of any convenient form, with a plug for permitting the escape of the water. The lower part of a bath so constructed may thus be used as a foot bath, whilst the seat may be used by the bather whilst bathing the upper part of his person; the tray or pool in the seat may be used as a sponging bath or a bidet, and by removing the moveable seat the whole of the posterior portion of the body may be submerged. A suitable soap tray or receptacle may be formed either inside of the front or foot bath portion of the bath, or within a spout constructed and fixed to the front part of the bath, by which it may be emptied. By attaching the pump and sockets for the poles and fittings of a shower bath, a bath constructed according to this Invention may be converted into a shower bath.

Thus, a bath constructed according to this Invention combines in one and the same article the facility for taking a foot bath, sponging bath, hip bath, or shower bath, enabling also the ordinary bidet to be dispensed with at pleasure.

SPECIFICATION in pursuance of the conditions of the Letters Patent, filed by the said John Oxley in the Great Seal Patent Office on the 26th February 1859.

TO ALL TO WHOM THESE PRESENTS SHALL COME, I, John Oxley, of Camden Town, send greeting.

WHEREAS Her most Excellent Majesty Queen Victoria, by Her Letters Patent, bearing date the Thirtieth day of August, in the year of our Lord One thousand eight hundred and fifty-eight, in the twenty-second year of Her reign, did, for Herself, Her heirs and successors, give and grant unto me, the said John Oxley, Her special licence that I, the said John Oxley, my executors, administrators, and assigns, or such others as I, the said John Oxley, my executors, administrators, and assigns, should at any time agree with, and no others, from time to time and at all times thereafter during the term therein expressed, should and lawfully might make, use, exercise, and vend, within the United Kingdom of Great Britain and Ireland, the Channel Islands, and Isle of Man, an Invention for "Improvements in

BATHS," upon the condition (amongst others) that I, the said John Oxley, by an instrument in writing under my hand and seal, should particularly describe and ascertain the nature of the said Invention, and in what manner the same was to be performed, and cause the same to be filed in the Great Seal Patent Office within six calendar months next and immediately after the date of the said Letters Patent.

NOW KNOW YE, that I, the said John Oxley, do hereby declare the nature of my said Invention, and in what manner the same is to be performed, to be particularly described and ascertained in and by the following statement and accompanying Drawing:—

This Invention relates to a novel combination of the parts of baths, by which a bath of the sise and form of an ordinary hip bath is made to serve the purposes for which various other baths and such like domestic conveniences are ordinarily employed or would be rendered necessary, thus economizing the room necessary for accommodating several articles, and giving increased comfort and convenience to the users of baths.

The difficulties attendant upon preparing an ordinary reclining bath, the large quantity of water required for it, and the room it occupies, prevents the constant exercise by very many of the most important of all health-maintaining practises, whereas, by the introduction of the present Invention these objections and difficulties are avoided, and the facility given for thoroughly cleansing the entire body, requiring only a small quantity of water, and enabling the bather to perform his ablutions with ease whilst in a sitting posture, and without the risk of slopping or permitting the water to splash over, and which arrangement may also be combined with, when required, the ordinary fittings of a shower bath.

The Invention, as herein-before in part described, consists in constructing a bath somewhat in the form of the ordinary hip bath, and fitting the same with a moveable seat containing a recess for receiving a moveable tray, pool, or bidet; or the pool or bidet may be formed in such moveable seat, and of any convenient form, with a plug for permitting the escape of the water. The lower part of a bath so constructed may thus be used as a foot bath, whilst the seat may be used by the bather whilst bathing the upper part of his person; the tray or pool in the seat may be used as a sponging bath or as a bidet, and by removing the moveable seat the whole of the posterior portion of the body may be submerged. A suitable soap tray or receptacle may be formed either inside of the front or foot part portion of the bath, or within a spout constructed and fixed to the front part of the bath, by which it may be emptied. By attaching the pump and sockets for the poles and fittings of a

shower bath, a bath constructed according to this Invention may be converted into a shower bath.

Thus, a bath constructed according to this Invention combines in one and the same article the facility for taking a foot bath, sponging bath, hip bath, or shower bath, enabling also the ordinary bidet to be dispensed with.

In the accompanying Drawing, Figs. 1, 2, 3, 4, & 5, exhibit views of a bath and the various parts thereof, constructed according to this Invention; Fig. 1 being a longitudinal section, shewing the moveable seat in its place; Fig. 2, a plan of the bath, Fig. 1; Fig. 3 being a sectional view in elevation of Figs. 1 & 2; Fig. 4 being a front or edge view of the moveable seat; and Fig. 5, a plan of the same.

The bath shewn in Figs. 1, 2, & 3 is somewhat similar in shape to the ordinary "hip bath," the seat with its bidet or sponging bath being moveable, and when required to be placed in the outer case or bath may be held securely by suitable fixings, either in the shape of dovetailed slides, or by hooks taking into projecting eyes or sockets, as may be most convenient; or, if preferred, it may be made as a fixed portion of the bath.

In the several Figs. 1, 2, 3, 4, & 5, like parts are similarly lettered for reference; *a*, *a*, being the sides of the bath; *b*, the seat, which, together with the bidet, is formed in one piece, and is made so as to be removeable at pleasure. I prefer to form the moveable seat *b* of a box form, as shewn in Figs. 4 & 5, so as to give sufficient and steady bearing against the side of the bath; *c*, the bottom of the bath; *d*, *d*, two sockets, one formed on each side of the bath, into which flat hooks or projections from the under side of the moveable seat *b* take into them, and securely hold the moveable seat in its place, but any other description of fastening may be applied in lieu thereof; *e* is a plug by which the contents of the bidet may be run off; *f* is a spout by which the bath may be emptied; and *g* is a perforated plate fixed within the spout for the purpose of holding soap, and this may either occupy the entire area of the spout or a portion only thereof; *h* is a back strut or block piece, soldered on to the back of the bath, for the purpose of increasing the base thereof, and steadying it whilst in use; but any other form may be given to the part *h*, or to any other part of the bath, according to the taste of the maker; as, for instance, instead of making the intersection of the lower part of the bath with the sides or raised portion thereof, a horizontal line coming into a curve, as shewn in Fig. 1, a curved line may be given thereto, or any other form or variation may be adopted according to taste.

In the Figs. 6, 7, 8, 9, & 10 a modification is shewn of the bath just described, but which, instead of requiring so large a quantity of water in the

lower part thereof as would be necessary in the baths, Figs. 1, 2, &c., will require only sufficient to fill the lower or foot bath portion thereof, which foot bath portion, however, may, by the removal of the pool or bidet, be used for bathing the posterior portions of the body.

Fig. 6 is a sectional elevation or longitudinal section; Fig. 7, a plan; and Fig. 8, a transverse section of Fig. 6; Fig. 9 being a longitudinal section of the pool or bidet with the waste plug; and Fig. 10, a transverse section of Fig. 9. A, the sides of the bath; B, the seat; C, the bottom; D, the recess formed in the seat for receiving the moveable tray or bidet, which may either be formed in the shape shewn, or of any other convenient form, to act as a bidet or sponging bath, or it may be placed transversely instead of longitudinally, as shewn in the Drawing; E is the moveable tray or bidet shewn in Figs. 9 & 10, of a form suitable to fill the opening made in the seat. It will be perceived that there is a plug at one end for permitting the escape of the water. F, F, are the legs placed under the back part of the seat to support it whilst in use; G, G, are horizontal stays or rails to secure and frame the body and legs together; I is a spout by which the bath may be emptied; K, a soap dish, which may be placed within the spout, as shewn, or in any other convenient position.

The legs, or mode of supporting the bath, shewn in Figs. 6, 7, &c., may be varied in form or design, in accordance with taste; and other modifications in form of the parts may be made to suit taste or convenience.

Having now described my Invention, and illustrated the same by the accompanying Sheet of Drawings, I wish it to be understood that what I claim is, the construction of baths as herein described, whereby several baths or similar conveniences are combined in one apparatus.

In witness whereof, I, the said John Oxley, have hereunto set my hand and seal, this Twenty-fifth day of February, One thousand eight hundred and fifty-nine.

JOHN OXLEY. (L.S.)

LONDON:
Printed by George Edward Eyre and William Spottiswoode,
Printers to the Queen's most Excellent Majesty. 1859.

Digitized by the Internet Archive
in 2019 with funding from
Wellcome Library

https://archive.org/details/b30751974

A.D.1858. AUG. 30. N°1963.
OXLEY'S SPECIFICATION.

FIG. 5.

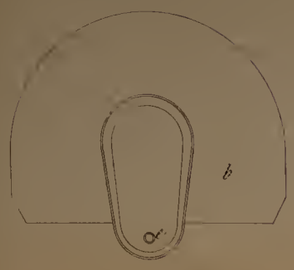

FIG. 1.

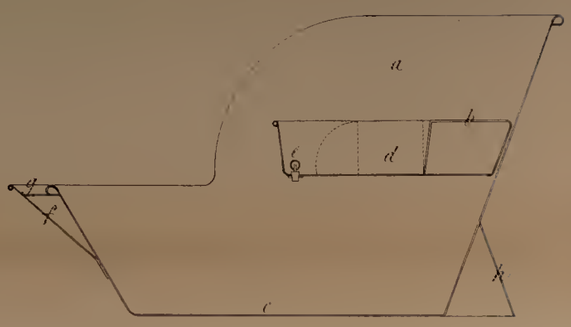

FIG. 4.

FIG. 3.

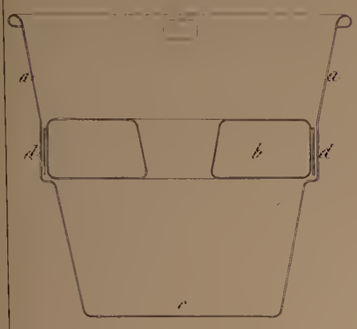

FIG. 2.

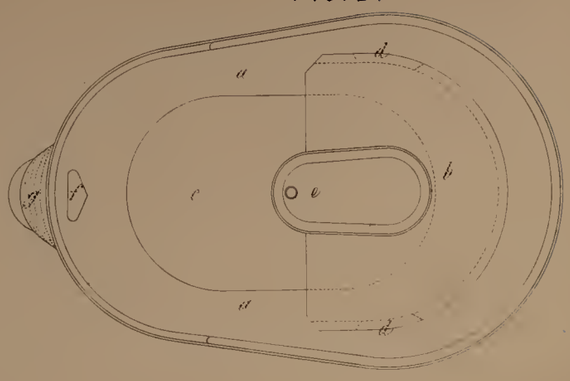

Scale 1¼ Inch = 1 Foot.

FIG. 6.

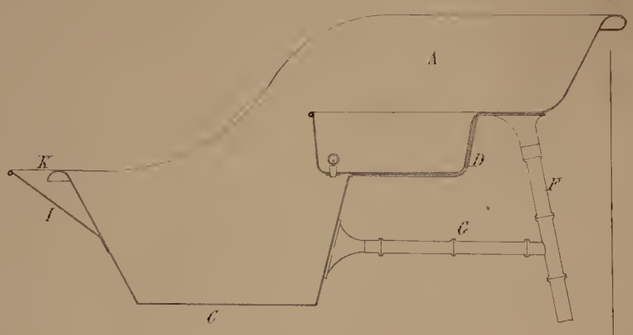

FIG. 9.

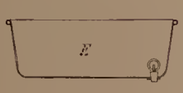

FIG. 10.

FIG. 8.

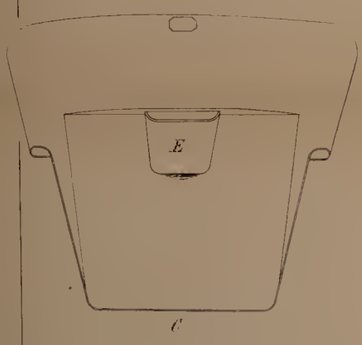

FIG. 7.

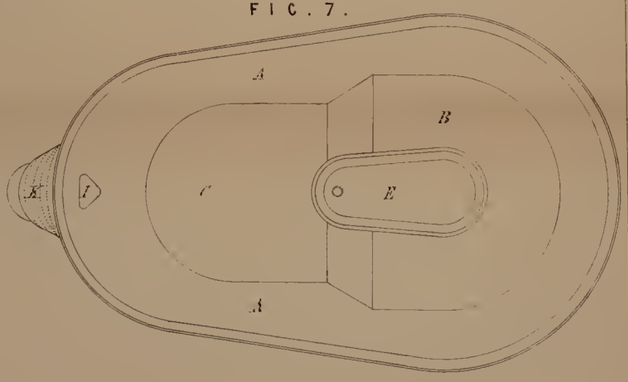

The filed drawing is colored.

Drawn on Stone by Maltby & Sons.

LONDON: Printed by GEORGE EDWARD EYRE and WILLIAM SPOTTISWOODE,
Printers to the Queen's most Excellent Majesty. 1859.